CHIPSID

SHOW

CHIP SID SHOW - 27/01/2021 - Episode 28

Max Hall on Radio Free Matlock

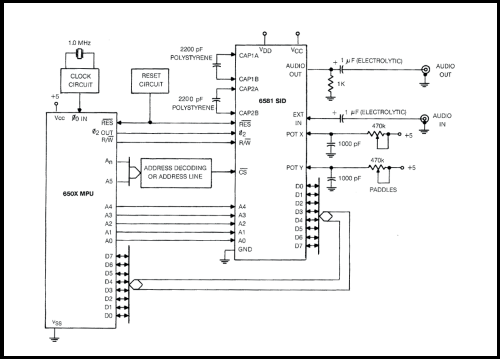

CHIP SID SHOW - 27/01/2021
Episode 28

CHIPSID

SHOW

CHIP SID SHOW - 27/01/2021
Episode 28

DAM (David Major)	Tomb Dancer	2021	3:16
Odie (Sean Connolly)	Salty Lemon	2020	4:17
Psycho8580 (Marcin Majdzik)	Dude With Attitude	2021	3:14
Fegolhuzz (Figge Wulff Wasberger)	Snowcial Distancing	2020	2:33
Drax (Thomas Mogensen)	Warriors	1989	2:15
Geir Tjelta	Artillery	2009	3:58
Jason Page and Richard Bayliss	The Lord of Dragonspire	2019	3:21
Jeroen Tel	Hotrod	1989	3:33
Rob Hubbard and Jason Page	Era Of Eidolon	2021	3:04
Geir Tjelta	Niggling	1989	3:54
Laxity (Thomas Egeskov Petersen)	Depressed	1988	6:27
MCA (Michiel van den Bos)	Blade Runner	1994	3:44
Odie (Sean Connolly)	Carl Lewis Challenge	2021	4:25
Steel (Mario Laugell)	World of Music (Tune 2)	1989	2:25
Surgeon (Przemek Mroczkowski)	Sodom Clinic	2009	2:33
Mibri (Michael Philip Bridgewater)	Obscure Alcopops	2020	2:56

55:55

Max Hall on Radio Free Matlock